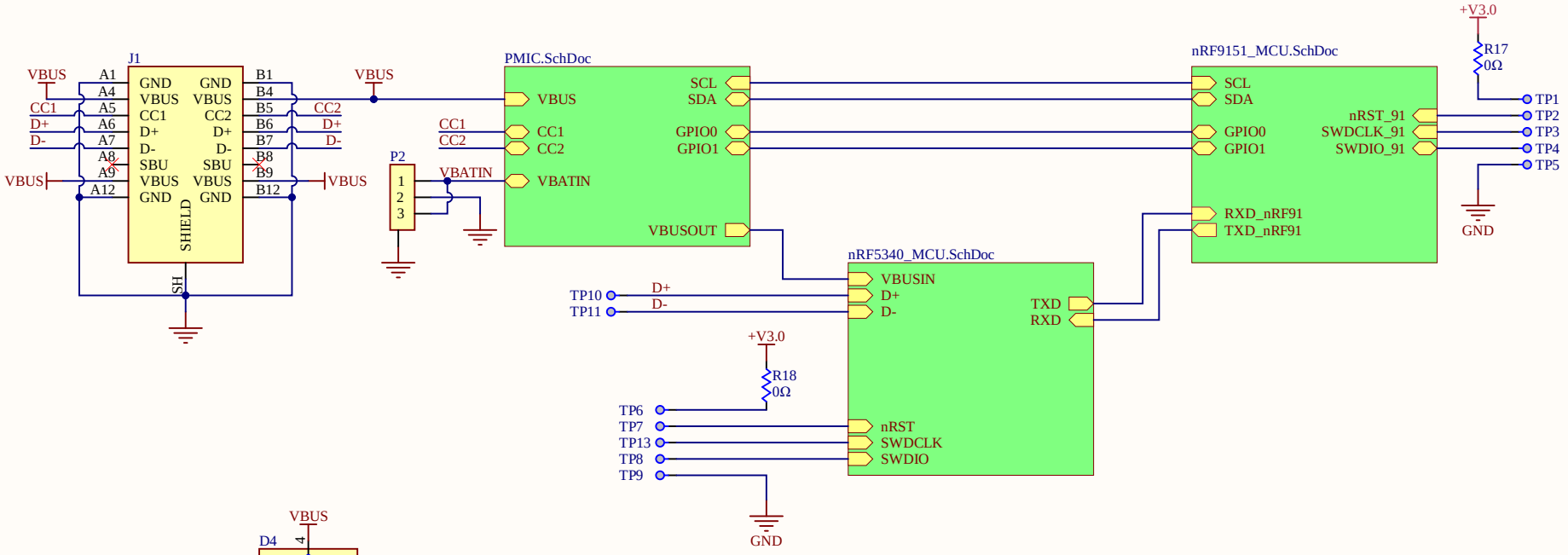

NRF5340
NRF9151
NPM1300

Title: *Top_Level.SchDoc*			
Size: A4	Company:	Revision: 3.0.0	
Reviewed By:		Drawn By:	
Project Name: [No Variations]			
Date: 13/05/2025	Time: 11:44:25 AM	Project: SoundBridge.PrjPcb	Sheet: 1 of 4

ALTIUM DESIGNER
25.2.1.25

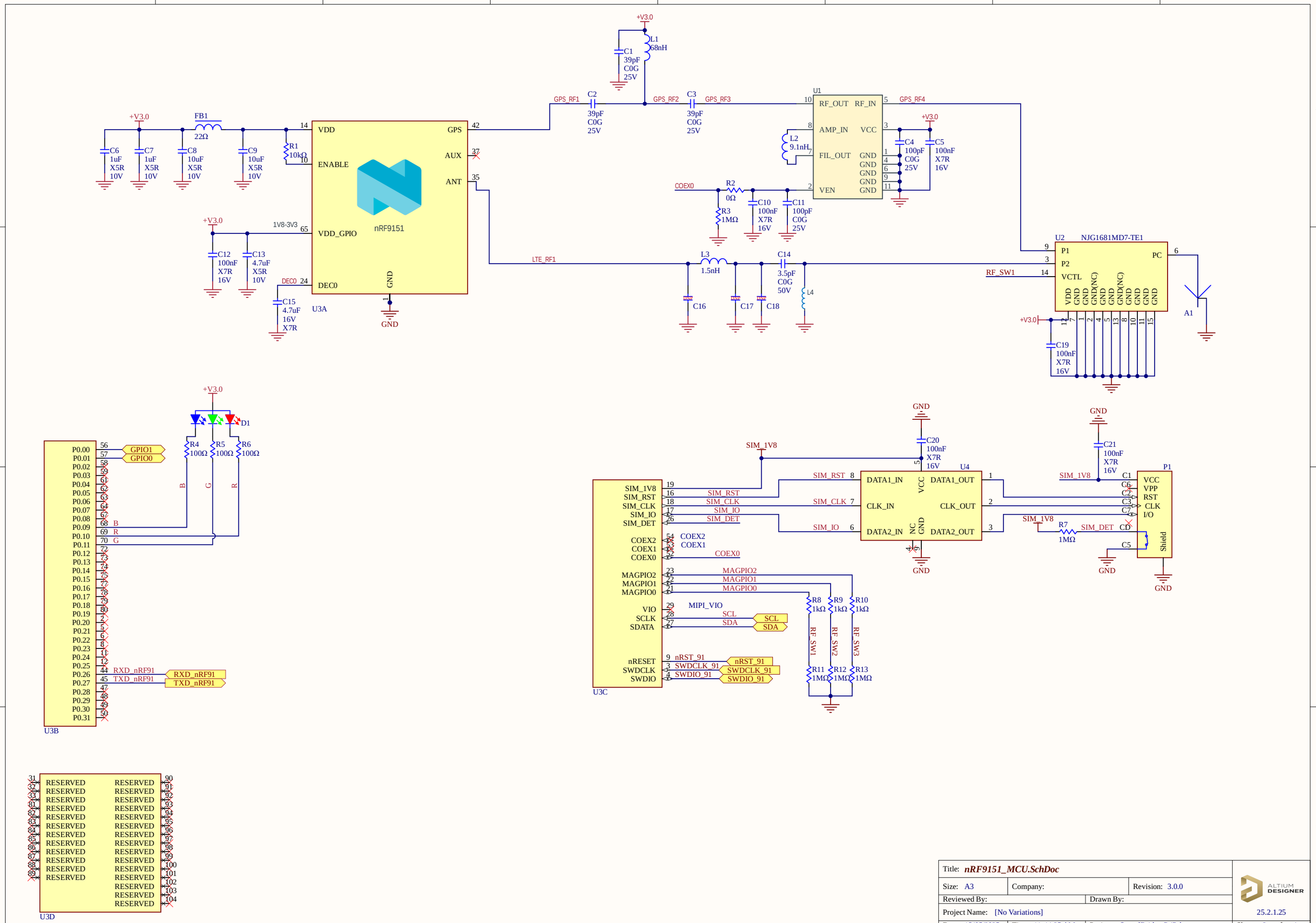

Title: *nRF9151_MCU.SchDoc*			
Size: A3	Company:	Revision: 3.0.0	
Reviewed By:		Drawn By:	
Project Name: [No Variations]			25.2.1.25
Date: 13/05/2025	Time: 11:44:25 AM	Project: SoundBridge.PrjPcb	Sheet: 2 of 4

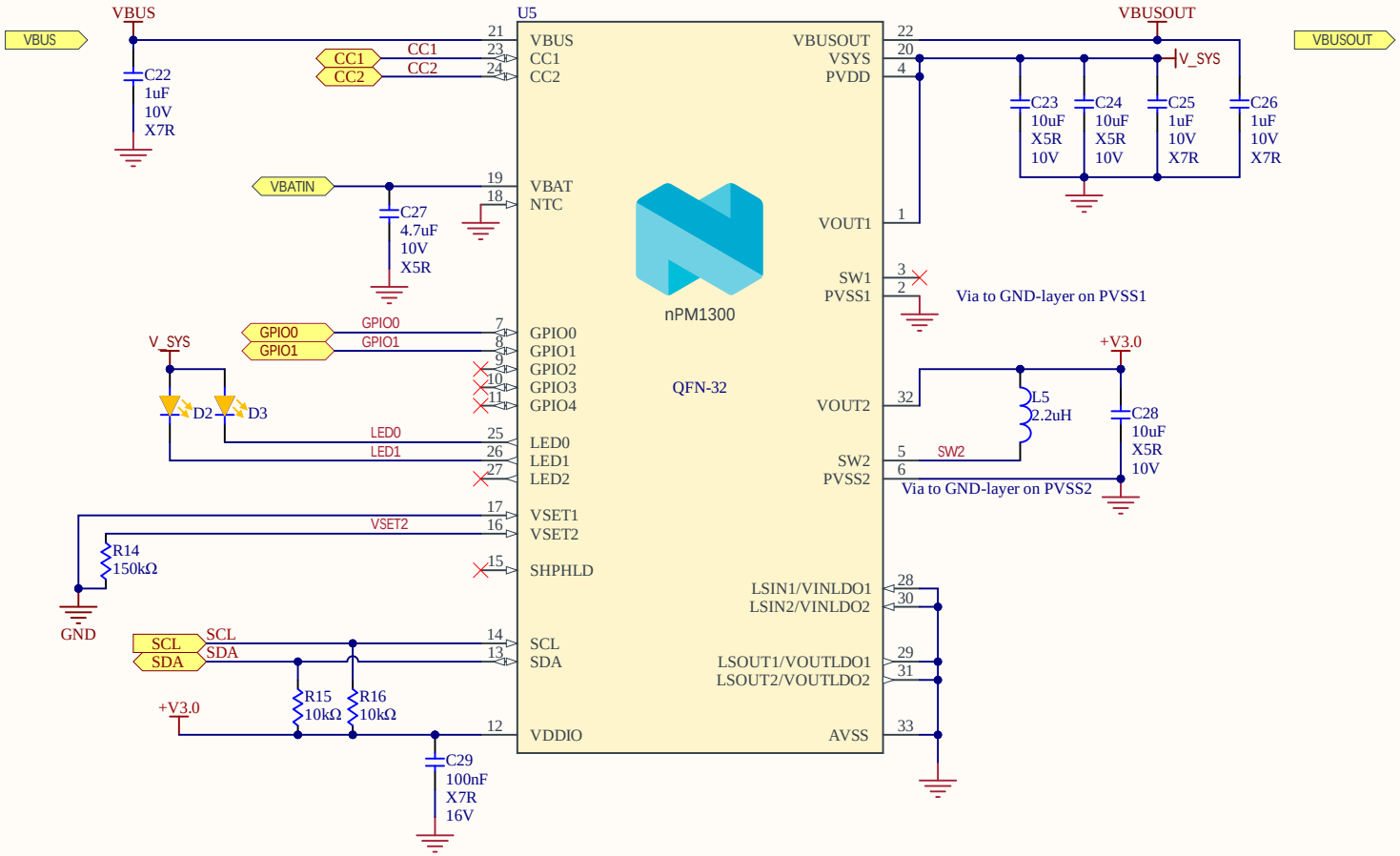

Title: *PMIC.SchDoc*			
Size: A4	Company:	Revision: 3.0.0	
Reviewed By:		Drawn By:	
Project Name: [No Variations]			25.2.1.25
Date: 13/05/2025	Time: 11:44:25 AM	Project: SoundBridge.PrjPcb	Sheet: 3 of 4

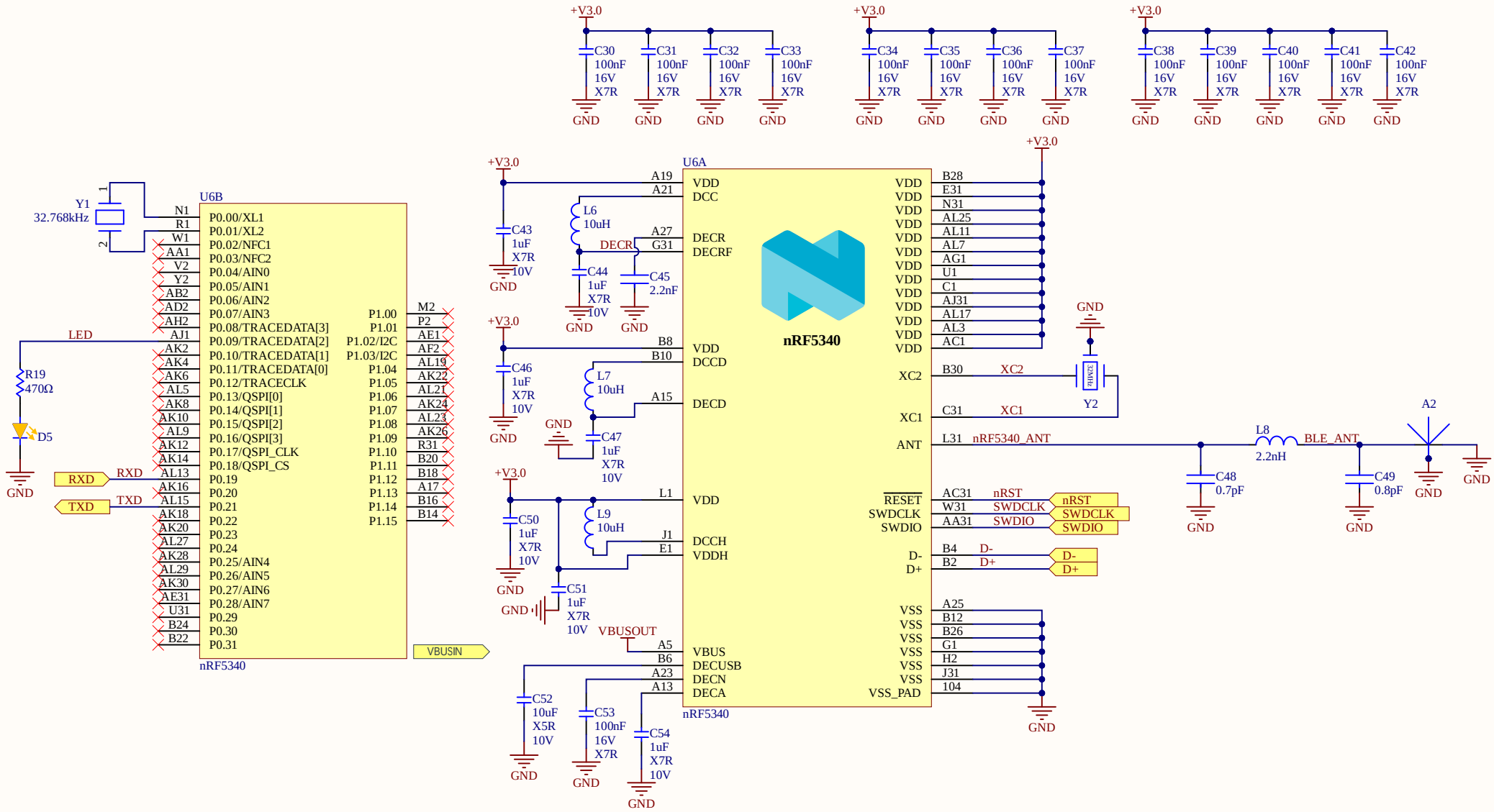

Title: *nRF5340_MCU.SchDoc*			
Size: A4	Company:	Revision: 3.0.0	
Reviewed By:		Drawn By:	
Project Name: [No Variations]			25.2.1.25
Date: 13/05/2025	Time: 11:44:25 AM	Project: SoundBridge.PrjPcb	Sheet: 4 of 4